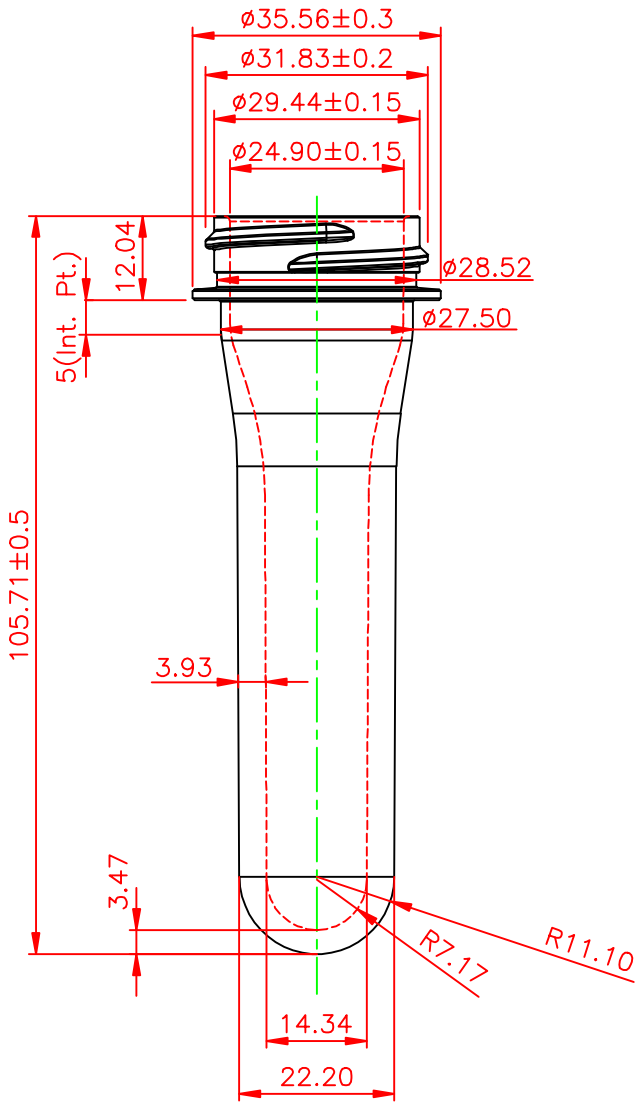


| | | | | | | |
|---|---|---|---|---|---|---|
| | | | | 0 ±1 | 0 ±0.5 | 0 ±5 |
| | | | | 0.0 ±0.5 | 0.0 ±0.1 | 0.0 ±2 |
| | | | | 0.00 ±0.15 | 0.00 ±0.02 | 0.00 ±1 |
| | | | | 0.000 ±0.05 | 0.000 ±0.005 | 0.000 ±0.1 |
| REV. # | DESCRIPTION OF REVISION | SIGN. & DATE | REQUEST REFERENCE | PLASTIC | TOOLING | WELDING & FAB. |
| | | | | GENERAL TOLERANCES UNLESS SPECIFIED FOR | | |

**INTER GULF LTD.,**
P.O. BOX 6131,
SHARJAH, U.A.E

TITLE: 30g M33S400 NECK PREFORM
(TOTAL LENGTH 105.71mm)

DWG. NO: 101 4 0132
DWG FILE NAME: 10140132

| | | | | | |
|---|---|---|---|---|---|
| DRG. DO NOT SCALE | DESIGNED BY T.V.Sekaran | DATE 14-02-09 | MAT'L: PET | SHEET: 1OF1 | SCALE: 1:1 |
| IMPORTANT: THIS DOCUMENT AND THE INFORMATION HEREIN IS THE PROPERTY OF INTERGULF COMPANY AND IS NOT TO BE REPRODUCED, COPIED, OR DISCLOSED WITHOUT PRIOR WRITTEN PERMISSION. | CHECKED BY | DATE | WEIGHT: ±0.5g 30g | SIZE: M33S400 | |
| | APPROVED BY | DATE | ALL DIMENSIONS ARE IN mm UNLESS SPECIFIED GEN. TOLERANCES UNLESS SPECIFIED FOR PET PREFORMS ±0.15 AND PET BLOWING BOTTLES ±1 | | |