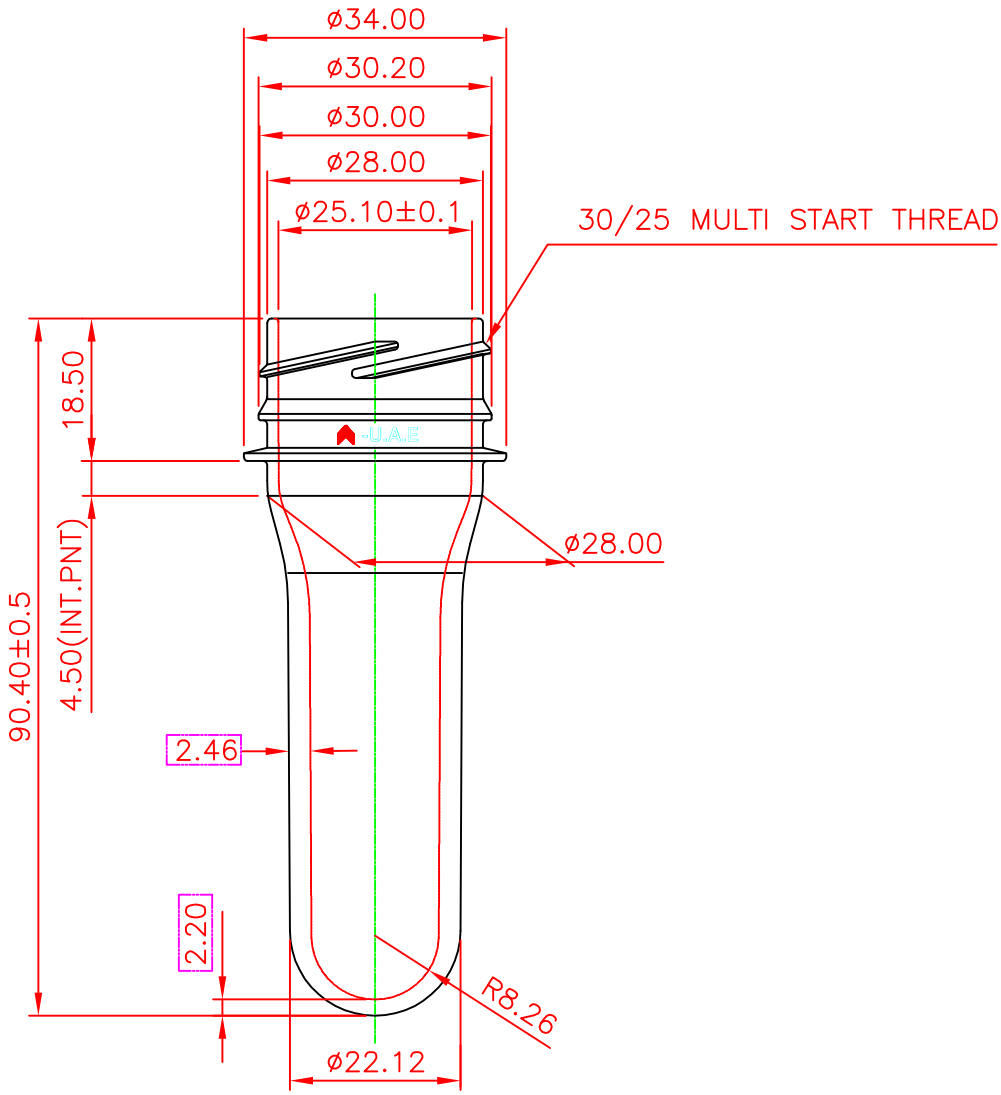

				0.0 ±0.5	0.0 ±0.1	0.0 ±2
				0.00 ±0.15	0.00 ±0.02	0.00 ±1
				0.000 ±0.05	0.000 ±0.005	0.000 ±0.1
REV. #	DESCRIPTION OF REVISION	SIGN. &	REQUEST REFERENCE	PLASTIC	TOOLING	WELDING & FAB.
				GENERAL TOLERANCES UNLESS SPECIFIED FOR		

INTER GULF LTD.,
P.O. BOX 6131,
SHARJAH, U.A.E

TITLE: 18g PET PREFORM (PREFORM LENGTH 90.40mm)

DWG. NO: 101 3 0045

DWG FILE NAME: 10130045

DRG. DO NOT SCALE	DESIGNED BY t.v. sekar	DATE 12-10-03	MAT'L: PET	SHEET: 1OF1	SCALE: 1:1
IMPORTANT: THIS DOCUMENT AND THE INFORMATION HEREIN IS THE PROPERTY OF INTERGULF COMPANY AND IS NOT TO BE REPRODUCED, COPIED, OR DISCLOSED WITHOUT PRIOR WRITTEN PERMISSION.	CHECKED BY	DATE	WEIGHT: ±0.3g 18g (S.W:1.33)	SIZE: REF. DRG. Hus_2771415	
	APPROVED BY	DATE	ALL DIMENSIONS ARE IN mm UNLESS SPECIFIED GEN. TOLERANCES FOR PET PREFORMS ±0.15 AND PET BLOWING BOTTLES ±1		